The Weather Hazard Warning in sim^{TD}

A Design for Road Weather Related Warnings in a Large Scale Car-to-X Field Operational Test

Attila Jaeger and Sorin A. Huss
Technische Universität Darmstadt
Integrated Systems and Circuits Lab
Hochschulstraße 10, 64289 Darmstadt, Germany
{jaeger|huss}@iss.tu-darmstadt.de

***Abstract*—Inter-vehicle communication and communication between vehicles and infrastructure (C2X) is a promising technology towards enhancement to active road safety and traffic efficiency. Thereby, vehicles create an ad-hoc network with adjacent vehicles and roadside stations in order to exchange foresighted traffic information. These messages may contain warnings of hazardous situations or information for traffic efficiency enhancements. One of various possible use cases for C2X is the *Weather Hazard Warning*. Within this use case, information and warnings about local weather events are delivered to drivers on the road. Therefore, weather relevant data obtained from the existing infrastructure of weather measurement stations are combined with data gathered by vehicles driving along roads.**

In this work, we describe an architecture which may enable such a Weather Hazard Warning in lard scale C2X communication field operational tests. The architecture is developed in context of and will be embedded in to the German research project *Safe and Intelligent Mobility – Test Field Germany*. However, it may serve as a reference implementation for a potential rollout of C2X communication.

I. Introduction

Intelligent Transport Systems (ITS) based on dedicated short range communication [1] is considered as a key technology to achieve improvement of active safety and traffic efficiency. Thereby, cooperative information interchange between vehicles as well as vehicles and infrastructure (Car-to-X, C2X) enables new possibilities to inform the driver about potential dangerous situations [2]. Besides achievements already reached, further research on C2X communication is needed, towards its introduction on the market. For upcoming work, a special focus will be set on field operational tests to verify the feasibility and effectively of such ITS.

Safe and Intelligent Mobility – Test Field Germany (sim^{TD}) [3], a German research project, considers results of previous research efforts and establishes a field trial, large enough to examine the entire spectrum of C2X. Therefore, the project involves several partners from the automotive and telecommunication domain, public road authorities as well as universities and research institutes. The established test fleet deploys up to 400 vehicles equipped with a C2X communication system (*ITS Vehicle Station*, IVS). The test field is located in and around the city of Frankfurt, Germany, and includes motorways, rural, and urban roads together equipped with more than 100 communication units at the roadside (*ITS Roadside Station*, IRS). Additional traffic and driving simulations cover situations which cannot be examined in field trials.

The *Weather Hazard Warning* is one of various use cases investigated in sim^{TD}. Within this use case the driver will get information and warnings about upcoming local weather events, which may influence the road safety. Thereby, weather related information out of an already established and well proven weather measurement infrastructure is made available to road traffic participants. In the opposite direction, the data basis of weather services is enhanced with additional data gathered by sensors in vehicles. Hence, the knowledge about the weather situation will be improved and more precise weather events will be detected.

One approach to deliver road weather relevant information to vehicles is pronounced in [4]. This system delivers individual forecast only to registered subscribers. Therefore, a central station needs detailed and personalized information about current position and trip destination, which is a huge challenge to driver's privacy. Another approach uses the *Radio Data System – Traffic Message Channel* (RDS-TMC) [5], which transmits data via radio broadcasts to all receivers, even if they are far away and are not affected by the danger. Furthermore, both solutions do not use the opportunity to expand the data basis by using vehicles as mobile sensors, delivering data gathered along the road. The initiative *Vehicle Infrastructure Integration* (VII) advocates C2X technology to distribute weather information [6]. Meanwhile, Weather Hazard Warning in different variations has been or is still under investigation in C2X research projects and programs in America, Asia, and Europe.

However, in [7] numerous open research challenges are referred to. The field operational test and driving simulation in sim^{TD} will give results helping to close knowledge gaps and finally support further steps on the way to market launch of C2X systems.

A novel concept for Weather Hazard Warning is proposed in [8]. The Weather Hazard Warning in sim^{TD} is a field operational test realization based upon these basic ideas and

978-1-61284-671-2/11/$26.00 ©2011 IEEE

concepts proposed there.

In the following section, we will describe the setup for the Weather Hazard Warning in sim^{TD}. Afterwards the detection of road weather and treatment of gathered information is described. Information on how the application will be tested and which data are collected to evaluate it will be given, before a short conclusion and some remarks on future work will finish this document.

II. Application Setup Description

One of the main challenges aimed in the Weather Hazard Warning use case, is distribution of weather relevant information to notify drivers about hazards and, finally, to increase road safety. Thereby, three information gaps have to be bridged. First, knowledge about road safety relevant weather events out of the currently established large infrastructure of approved and well equipped weather measurement stations has to be made available to drivers on the road. Secondly, knowledge about weather hazard available in vehicles has to be made available to other vehicles in the near area too. Thirdly, weather relevant data, e. g., temperature or rain fall, measured by already installed sensors in the large number of vehicles all over the roads, has to be used to extend knowledge based on established weather stations.

Hence, the Weather Hazard Warning consists out of functionalities deployed in vehicles as well as functionality on the infrastructure side. Consequently, Weather Hazard Warning in sim^{TD} is realized out of two separated applications, working together pretty close:

- The *Road Weather Warning* application covers functionality in vehicles. This is displaying warnings to the driver, gathering environmental data, detecting local dangers, and distributing C2X messages, regarding these detected dangers.
- The *Identification of Road Weather* application covers functionality in a *Road Weather Center* (RWC), placed in a central station (*ITS Central Station*, ICS). Within this center, data from measurement stations and vehicles are aggregated and warnings considering an overall view are generated.

In the sim^{TD} field operational test setup the ITS Central Station, hosting the Road Weather Center is located at the *Hessian Traffic Center*, a local road authority. Since wireless C2X communication can only be used for short range communication, message exchange between the central RWC and vehicles distributed all over the test field is realized via IRS placed along the highways and rural roads in the test field. They are cable-connected to the ICS. The external weather data gathered from established measurement stations are collected and delivered to the RWC via the Hessian Traffic Center.

Each vehicle and roadside unit in sim^{TD} is equipped with a C2X unit, consists of an *Application Unit* (AU), i. e., a embedded computer hosting applications and basic functionality, and a *Communication Control Unit* (CCU), which integrates all modules necessary for C2X communication based on IEEE 802.11p [9] as well as an additional connection to the internal CAN-bus, which delivers all probe data available in the vehicle. Furthermore, to each IVS AU, a *Human Machine Interface* (HMI), i. e., a small touch screen, is attached. It is used for displaying information and warnings and collecting user input. A detailed sim^{TD} system overview as well as detailed information on how IVS, IRS and ICS are composed, on security and privacy aspects, and on how vehicle probe-values are gathered can be found in [10]. A significantly simplified sim^{TD} overview with emphasis on communication links and the weather relevant parts is depicted in Fig. 1. For C2X communication, a various number of message types are provided [11]. However, in Weather Hazard Warning only two of them are needed: the *Decentralized Environmental Notification* (DEN) and the *Probe Vehicle Data* (PVD).

DENs are used as explicit notifications about a dangerous weather event in the near environment. DENs may be generated either from a RWC or directly from vehicles driving nearby. Therefore, they aim to reduce the first two information gaps stated before. A DEN mainly consists of event type, detecting reliability, location, detection time, and message validity time. Thereby, the location in Weather Hazard Warning is encoded as a rectangle surrounding the hazardous area. In C2X communication, sending messages to a specified geographical area is supported [2]. Since weather events affect an area regardless of which direction a vehicle approaches, in sim^{TD} weather related DENs are addressed to a rectangle spaciously surrounding the affected area. To reach the intended region and to be spread in it, messages are forwarded via *multi-hop* over several vehicles. Additionally, DENs are distributed by the RWC via IRS. Communication scenarios for DEN distribution are depicted in Fig. 1.

PVD consist of collected sets of probe values with timestamp and geographical position. These sets are gathered while the vehicle is driving along the road and accumulated in order to build up a *weather profile* for the past region. The weather profile may contain sensor measurements like ambient temperature, rain intensity, air humidity, barometric pressure, or windshield wiper level. In sim^{TD} only temperature and wiper level are used. Therefore, PVD reduces information gap three. In contrast to DENs, PVD are rarely processed data and need to be interpreted. Due to rather low processing power in vehicles, this extensive data evaluation is not performed on-board, but on the infrastructure side only. Consequently, PVD are not transmitted to other vehicles, but are forwarded to the RWC. In the center, PVD enlarge information about the situation on the road and, thus, enable the generation of more precise DENs out of the Road Weather Center. Communication scenarios for PVD distribution are depicted in Fig. 1 too.

III. Detection of Weather Events

In the Weather Hazard Warning the driver will get information and warnings about upcoming weather hazards. Therefore, weather hazards are detected by vehicles, using their on-board sensors. In this section, we first describe which kinds of hazards can be detected, followed by a description of the

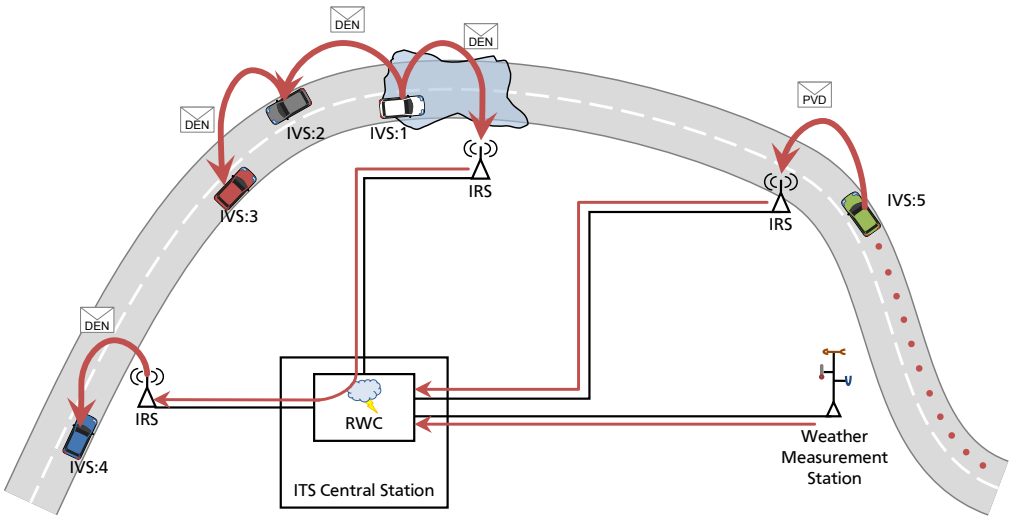

Fig. 1. Weather Related sim^{TD} Overview and Communication Links

situations, which indicate a weather hazards for vehicles. The hazard detection in the ICS is briefly illustrated afterwards.

A. Weather Event Types

Each weather hazard is encoded as an *event*. These events are evaluated in vehicles and distributed via C2X communication. The Weather Hazard Warning in sim^{TD} regards four basic event types.

- Heavy rains
- Reduced visibility due to fog
- Extreme weather conditions due to strong cross winds
- Slippery road due to ice or snow

Furthermore, an event for aquaplaning is imaginable. However, this type is not considered in sim^{TD} field test, but only in driving simulations as described in Section V.

In DEN messages, as well as for application internal use, these event types are encoded essentially according to *Transport Protocol Experts Group – Traffic Event Compact* (TPEG-TEC) [12].

B. Vehicular Weather Detection

For FOTs as well as in the early launch stage of C2X communication, detecting weather events should only depend on sensors, which are commonly installed in present vehicles. This way, availability of these sensors and, therefore, operability can be easily ensured.

Some possibilities to indicate road weather situation upon vehicle sensors and problems with this are stated, e. g., in [6]. Unfortunately, there are no sufficient capabilities available in vehicles for detecting cross winds. Consequently, in sim^{TD} DENs regarding a cross wind event are always sent from the RWC. However, the other three event types are detectable directly by the vehicles.

For detecting a rain event, the necessary condition is a wiper speed of at least level two. Additional conditions, which increase reliability of the detection, are the low beam status and, if available, the rain intensity detected from a rain sensor.

A fog event is detected, if the rear fog lights are switched on. Additionally, the low beam status and, if available, the front fog light status increases the reliability of the detection.

If the external temperature is below 2 °C and, if available, an electronic stability control (ESC) or anti-lock braking system (ABS) is activated in unusual situations, a slippery road event is detected. Additional indicators to increase reliability of the event are not considered in sim^{TD}.

Since drivers usually drive more carefully in hazardous situations, in addition to the named conditions, there are speed threshold regarded in the detection of each of these event types. Furthermore, reliability increases with decreasing driving speed. Table I summarizes event types and conditions for in-vehicle detection. For detecting the beginning of an event, the necessary conditions have to be fulfilled for at least three seconds. This way, false event detection based on short appearance of runaway values or accidental pushed buttons, can be avoided. For the same reason, an according laziness has to be applied for detecting the end of an event.

To notify other road participants and the RWC about the event timely, a corresponding DEN message is sent at the moment it is detected first. While driving through the affected area, periodically new updated DENs are generated, each addressing the hazardous area since last sent message. Finally, on leaving the event, a last updated DEN is generated. A corresponding flow chart is depicted in Fig. 2. Since vehicles work together cooperatively, own DEN messages regarding detected events are dispatched, even if corresponding notifications had reached the vehicle before. The hazardous area of an event is always encoded in a rec-tangle, as defined for DEN messages [13]. To determine the rectangle, a trace is recorded while driving thru the event. The rectangle is laid to fit as tight as possible, around this cloud of trace points. However, a minimum length and width is regarded.

TABLE I
IN-VEHICLE WEATHER EVENT DETECTION SUMMARY

Weather Event Type	**TPEC-TEC**		**Detecting Conditions**	
	Cause Code	***Sub Cause Code***	***Necessary***	***Reliability Increasing***
Heavy rain	45	0	windshield wiper level ≥ 2 driving speed ≤ 80 km/h	low beam turned on rain intensity from a rain sensor lower driving speed
Reduced visibility due to fog	42	1	rear fog light turned on driving speed ≤ 50 km/h	low beam turned on front fog light turned on lower driving speed
Extreme weather conditions due to strong cross winds	43	1	*not detected by vehicles*	
Slippery road due to ice or snow	11	0	exterior temperature ≤ 2 °C unexpected ESC or ABS activity driving speed ≤ 50 km/h	lower driving speed

C. Infrastructure Weather Detection

Main challenge in the RWC is, beside the described forward-ing of vehicle generated DEN messages, the fusion of all re-ceived weather information. Namely, the event detection on infrastructure side is based on DEN messages generated by vehicles, probe values gathered by vehicles and transmitted in PVD messages as well as measurement values, gathered from weather measurement stations. In sim^{TD} all these data are collected in only one central station. This way, the RWC gets an overall overview. However, for deployment of C2X systems multiple local centers are probably required.

The *Deutscher Wetterdienst* (DWD), a German federal weather service, delivers, inter alia, information especially on road conditions and weather out of a large set of measurement stations located nearby roads. These data containing, e. g., wind speed and direction, several air and road temperatures, salinity on the road surface, and precipitation and precipitation type, i. e., rain or snow, are made available for the sim^{TD} test field. This way, measurement stations are integrated. These measurement values may result in explicit DEN messages, injected into the C2X system in addition to these generated by vehicles. Further external weather services, receiving data, i. e., PVD and DEN messages, or providing information, e. g., weather radar data, are not involved in sim^{TD}.

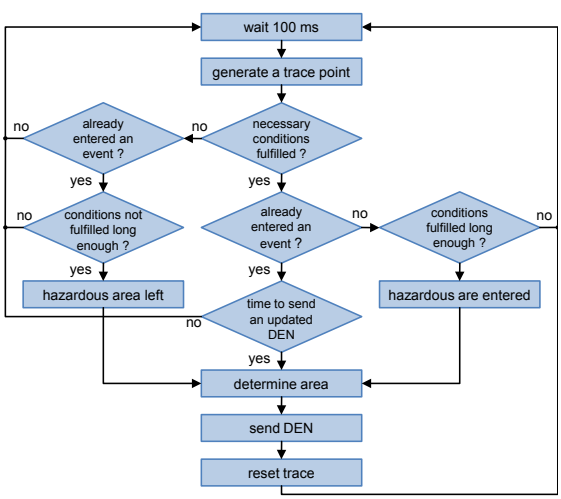

Fig. 2. Flow Chart of Basic In-Vehicle Detection Algorithm

Further measurement values collected in the RWC are the weather profiles gathered by vehicles and transmitted as PVD. Thus, vehicles serve as mobile sensors, collecting weather related data, i. e., exterior air temperature and windshield wiper level, along the roads. Using these profiles, information provided by DENs, delivered by vehicles or the RWC itself, can be cross checked and extrapolated. This *data fusion* generates a more actuate, reliable, and complete view on the weather situation. Thereby, wiper usage on low level does not result in DEN messages, but gives evidence on the movement of a rain event, whereas a temperature profile offers the possibility to forecast slippery road events.

IV. WEATHER EVENT AGGREGATION AND WARNING

As described before, each weather event results in multiple DEN messages when detected by a vehicle. On receiver side, these notifications have to be matched and stored together as they belong to the same event. Since one sending vehicle uses a constant event identifier while detecting one event, these notifications can be easily matched jointly. If considered that each event may be detected independently by every vehicle passing by and, additionally, by the RWC, used event identifiers differ between different senders. Hence, even if notifications have different event identifiers, receiving vehicles have to match them together, if they belong to the same event. This can be done by regarding event type and comparing affected area.

A. Event Area Matching and Aggregation

It is assumed that two event notifications belong to the same event, if they regard the same event type, e. g., Heavy Rains, and if the addressed hazardous areas overlap. Thereby, overlapping may be negligible small.

Regarding all associated notifications, an overall event area is calculated, fitting as tight as possible around the area of all notifications. Regarding all rectangle corners instead of a trace, the same algorithm as for detection can be utilized. Since they

are not transmitted in DEN messages, the underlying traces cannot be considered at his point.

This area aggregation has to be performed again, each time a new message is mapped to the event or a message mapped to the event expires, otherwise it does not change. However, the aggregated area is used to, e. g., calculate whenever a vehicle approaches an event, which is much more efficient than calculating approaching for every individual notification.

B. Time Depending Reliability of an Event

Each Message notifying about a weather event includes a reliability value indicating the probability of the event to be present at *message generation time* (MGT). This reliability value is assumed to be a real number in the range of 0, for lowest reliability, to 1, for highest reliability. However, the probability for the event to be still present at *current time* decreases monotonic over message validitiy time and should be lowest at *message expire time* (MET).

The mentioned decreasing is not necessarily linear. In [14] a nonlinear function is proposed to calculate a *time depending reliability* of a notification (r_{cur}). This firstly depends on the fraction q of past message validity depicted in (1) and secondly on the initial reliability (r_{mgt}), set in the message at MGT. The function is shown in (2) and exemplary depicted for $r_{mgt} = 1$ in Fig. 3. Since this function is just proposed and not evaluated yet, we will estimate its suitability during sim^{TD} field opperational test.

$$q = \frac{currenttime - \text{MGT}}{\text{MET} - \text{MGT}} \tag{1}$$

$$r_{cur} = \frac{r_{mgt}}{1 + 4 \cdot q^4} \tag{2}$$

In the Weather Hazard Warning, vehicle work cooperatively, by means of mutual confirmations. Hence, multiple event notifications reported by different origins with diverse time depending reliability values are aggregated on receiver side and an overall (time depending) reliability is determined. This way, single false positives may be of no consequence.

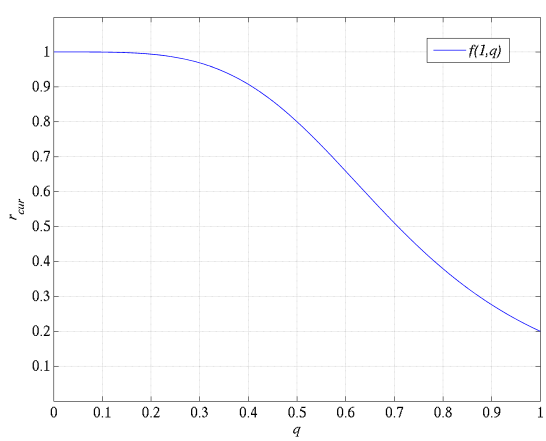

Fig. 3. Decreasing of Reliability r_{cur} over Past Message Validity Time with Initial Reliability $r_{mgt} = 1$

Adding time depending reliabilities for all involved messages obviously leads to high reliability values in case of a huge number of messages being received regarding the same event, even if each value may be pretty small. This behavior is not intended due to the high number of vehicles involved in Weather Hazard Warning.

Consequently, we determine the overall reliability by taking the *mean value* of all included time depending reliabilities. However, we have to consider that the overall reliability must increase whenever the number of notifications with high reliability is large. Hence, we weight big reliability values more than low ones in calculating the mean value.

In contrast to the aggregated event area, the time depending reliability could not be stored and reused, instead, it must be recalculated each time it is requested.

C. Driver Informations and Warnings

There are two types of driver notifications, to be displayed on the HMI, whenever a vehicle approaches an event: the driver *information* and the more conspicuous driver *warning*. To avoid annoying false-positive notifications, events with a reliability level below an appropriate threshold are not displayed.

Whether the driver notification is an information or a warning depends on the distance to event as well as on the driving speed. Since driver notifications aim towards an appropriate driving behavior, i. e., usually low driving speed, a warning is displayed, if the target speed, i. e., the same used at event detection, is only reachable with heavy braking. Otherwise, a less conspicuous information appears.

Finally, if the vehicle reaches the hazardous area, the notification screen disappears. Only in case of a cross wind or slippery road event, a small icon remains for the length of the event, since these hazards are hard to notice. Obviously, a driver notification is needless, if an event is only detected by the vehicle itself and not timely reported by other vehicles.

V. Field Operational Trial and Driving Simulations

The Weather Hazard Warning use case will be evaluated by means of multiple driving simulations as well as by test drives in the field operational trial period of sim^{TD} [15].

The field trial obviously aims towards the evaluation of the basic functionality of the C2X system. This is mainly the communication behavior, by means of message dissemination, message latency, and message lost, as well as the functional verification of the chosen algorithms and the implementation. Additionally, a special emphasis is put on investigating the driver's reactions and thus the driver's acceptance of such a C2X system. To classify driver's behavior in field trial, its position, driving speed, and distance to preceding vehicles is recorded along the way towards, through, and following an event. These logs are evaluated after the field trial.

For cross checks, a control group is consulted; this group consists of vehicles equipped with C2X, but deactivated HMI presentations. However, road weather warning is running in

Fig. 4. Driving Simulation for Fog Event [16]

background and, just the same as other vehicles, logs position, speed, distance, and, especially, the point, at which a HMI notification would have been presented. Thus, both groups can be compared and evaluated afterwards.

Weather events in field trial may occur randomly and may be rare. Hence, driving simulations are consulted to extend experimentally gathered data on driver acceptance and reaction. In contrast to real world trials, the used hexapod [16] provides the possibility to repeat trials frequently with well-adjusted weather intensity. Fig. 4 shows an impression of how the video screen looks like during simulations. In driving simulation, one restriction has to be considered, however: since each trail should cover multiple event types, a season change is needed to realize a slippery road event in a snow or black ice scenario. Hence, slippery road events in driving simulation are always due to aquaplaning instead.

Since the driving speed in urban roads is in general relatively low anyway, the evaluation of Weather Hazard Warning focuses on rural and motorway scenarios in driving simulation and field trials, respectively.

VI. Conclusion

In this work, we presented an application design for road weather related warnings using Car-to-X communication. The described functionality is part of and meets the requirements, systems architecture, and test field setup of the German research project sim^{TD}. Additionally, it is intended to be as close as possible to an operational system and, therefore, may serve as a reference realization for a potential market launch of C2X communication.

However, to achieve more reliable weather detection, an integration of additional sensors is required; e. g., a sensor for air humidity can deliver additional indication on rain or fog events too. Furthermore, Lidar, as available in some vehicles for Active Crouse Control, can be used to determine rain intensity [17]. However, intensive research has still to be done, before Lidar sensors in vehicles can be utilized for detecting rain or fog events for Weather Hazard Warning. Additionally, a sensor measuring barometric pressure may extend PVD and thus may deliver substantial information to weather services.

For deployment of C2X systems multiple local RWCs will be needed. However, the application shown here may be easily adaptable to this scenario, once IRSs are able to forward messages to corresponding centers.

Finally, during the field operational trial period of sim^{TD}, the use case will be evaluated intensively. Hence, the suitability of the chosen application setup, sensors, thresholds, and algorithms will be assessed. Additionally, further aspects will be obtained to refine and to improve the Weather Hazard Warning during its way to market launch.

Acknowledgment

This work was funded within the project sim^{TD} by the German Federal Ministries of Economics and Technology as well as of Education and Research and was supported by the German Federal Ministry of Transport, Building, and Urban Affairs.

References

[1] European Telecommunications Standards Institute (ETSI), *Intelligent Transport Systems (ITS); European profile standard for the physical and medium access control layer of Intelligent Transport Systems operating in the 5 GHz frequency band*, Std. ETSI ES 202 663, 2009.

[2] CAR 2 CAR Communication Consortium, "C2C-CC Manifesto," Tech. Rep., 2007. [Online]. Available: www.car-to-car.org

[3] Safe and Intelligent Mobility – Test Field Germany (sim^{TD}). [Online]. Available: http://simtd.de/index.dhtml///enEN/

[4] M. Smith, "Vehicle-centric weather prediction system and method," Patent US 2002/0 067 289 A1, 2002.

[5] International Electrotechnical Commission (IEC), *Specification of the radio data system (RDS) for VHF/FM sound broadcasting in the frequency range from 87.5 to 108.0 MHz*, Std. IEC 62 106:2000, 2000.

[6] K. R. Petty and W. P. Mahoney III, "Enhancing road weather information through Vehicle Infrastructure Integration," *Transportation Research Record: Journal of the Transportation Research Board*, vol. 2015, pp. 132–140, 2007.

[7] W. P. Mahoney III, "Transportation weather research and development needs to support ITS," Intelligent Transportation Society of America, Tech. Rep., 2005.

[8] H. Stübing and A. Jaeger, "Secure beamforming for weather Hazard Warning Application in Car-to-X Communication," *Lecture Notes in Electrical Engineering – Design Methodologies for Secure Embedded Systems*, vol. 78, pp. 187–206, 2010.

[9] Institute of Electrical and Electronics Engineers (IEEE), *Wireless LAN Medium Access Control (MAC) and Physical Layer (PHY) Specifications, Amendment 6: Wireless Access in Vehicular Environments*, Std. IEEE 802.11p, 2010.

[10] H. Stübing, M. Bechler, D. Heussner, T. May, I. Radusch, H. Rechner, and P. Vogel, "simTD: A Car-to-X system architecture for field operational tests," *IEEE Communications Magazine – Automotive Networking Series*, vol. 48, pp. 148–154, 2010.

[11] A. Hiller, C. Neumann, M. Mattheß, A. Festag, H. Santo, W. Zhang, C. Sorge, and M. Wiecker, "Project result: Specification of communication protocols," Deliverable D21.4, Tech. Rep., 2009.

[12] M. Dreher, G. Obert, J. Mertz, A. Rudolf, M. Scholz, R. van den Berg, M. Hessling, H. Pfeiffer, M. Lädke, and I. Petrov, "TPEG TEC Application Specification," Mobile.Info, Tech. Rep., 2006.

[13] European Telecommunications Standards Institute (ETSI), *Intelligent Transport Systems (ITS); Vehicular Communications; Basic Set of Application; Part 3: Specification of Decentralized Environmental Notification Basic Service*, Std. ETSI TS 102 637-3, 2010.

[14] A. Hiller, A. Hinsberger, M. Strassberger, and D. Verburg, "Results from the WILLWARN project," in *6th European Congress and Exhibition on Intelligent Transportation Systems and Services*, 2007.

[15] Safe and Intelligent Mobility – Test Field Germany, "Project result: Specification of test and experiment," Deliverable D13.2, Tech. Rep., 2009.

[16] Würzburger Institut für Verkehrswissenschaften GmbH. [Online]. Available: http://www.wivw.de/

[17] P. A. Lewandowski, W. E. Eichinger, A. Kruger, and W. F. Krajewski, "Lidar-based estimation of small-scale rainfall: Empirical evidence," *Journal of Atmospheric and Oceanic Technology*, vol. 26, pp. 656–664, 2009.